asd

asd

FOREWORD

We would like to thank our adviser.

TABLE OF CONTENTS

Page

FOREWORD ..... **v**
TABLE OF CONTENTS ..... **vii**
ABBREVIATIONS ..... **ix**
SYMBOLS ..... **xi**
LIST OF TABLES ..... **xiii**
LIST OF FIGURES ..... **xv**
SUMMARY ..... **xvii**
ÖZET ..... **xix**
1. INTRODUCTION **1**
2. CONCLUSIONS AND RECOMMENDATIONS **3**
2.1 Practical Application of this Study 3
2.2 Realistic Constraints 3
2.2.1 Social, environmental and economic impact 3
2.2.2 Cost Analysis 3
2.2.3 Standards 3
2.2.4 Health and safety concerns 4
2.3 Future Work and Recommendations 4
REFERENCES **5**

ABBREVIATIONS

HR	**:** High resolution
LR	**:** Low resolution
SR	**:** Super-resolution

SYMBOLS

dB **:** Decibel

LIST OF TABLES

Page

LIST OF FIGURES

Page

Figure 1.1 : This image shows the process discussed above. Multiple LR frames are used for SR reconstruction by using subpixel motions [2]. 1

SUMMARY

Summary in English.

ÖZET

Türkçe özet buraya.

1. INTRODUCTION

It is desired to have images in high resolution, both in digital image processing applications and in ordinary life. This need stems from the increased amount of detail and data: the higher the resolution, the more details in images [1].

SR techniques try to construct HR images by increasing the high frequency components and neglecting degradations of low resolution (LR) images. Interpolation can also be used to increase the resolution, but it is limited. SR methods are better constrained as multiple LR images are observed during the process. Non-redundancy in LR images are generally due to the subpixel shifts between them. Uncontrolled motions between imaging systems and scenes, movements of objects etc. may cause subpixel shifts. In the imaging process, an imaging system captures several LR frames which are obtained by downsampling the HR scene with subpixel shifts between each other. SR reconstruction reverses this process by aligning the LR observations to subpixel accuracy and combining them into a HR image grid.

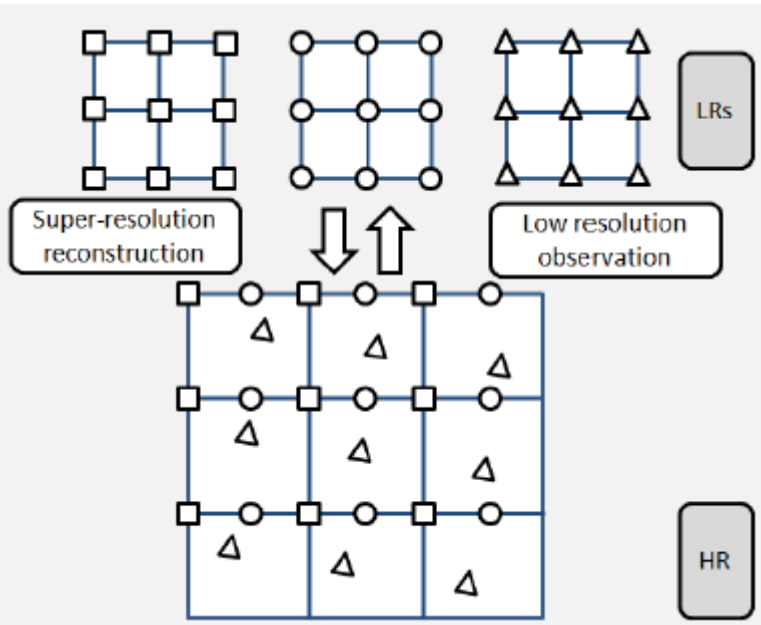

Figure 1.1 : This image shows the process discussed above. Multiple LR frames are used for SR reconstruction by using subpixel motions [2].

In Chapter 2, traditional methods will be discussed in depth and the traditional method implemented in this project will be explained. An introduction to neural networks will be given in Chapter 3 and methods using ANN/DL will be explained in Chapter 4. Results will be shown in Chapter 5 [3, 4].

2. CONCLUSIONS AND RECOMMENDATIONS

2.1 Practical Application of this Study

In the digital world, according to imaging applications, HR images frequently are used for later image processing and analysis. There are two main application areas for using HR images. First one is pictorial information for human interpretation. Other one is helping representation for automatic machine perception. SR is widely used in lots of areas.

2.2 Realistic Constraints

SR training with larger input images would improve the quality of results of the SR process. However, batch size in the learning is starting to shrinking to fit point. On the other hand, memory time and training time increase so much to the limit which no infrastructure can provide sufficient processing power.

2.2.1 Social, environmental and economic impact

Nowadays, many areas where photography is used, price of the camera and sensors increase by sensor density or correspondingly image age pixel density so that super resolution has a great impact on photography sector by producing high resolution images by using only successful algorithms.

2.2.2 Cost Analysis

Cost analysis includes engineers' wages and required high performance equipments.

2.2.3 Standards

This thesis implemented in accordance with IEEE Standard Glossary of Image Processing and Pattern Recognition Terminology.

2.2.4 Health and safety concerns

There are no health and safety concerns.

2.3 Future Work and Recommendations

In artificial neural network, there is always a option for adaptive and faster methods for deep learning algorithms.

REFERENCES

[1] T. Huang and J.Yang, "Image super-resolution: Historical overview and future challenges," tech. rep., University of Illinois at Urbana-Champaign.

[2] J. Kennedy, O. Israel, A. Frenkel, R. Bar-Shalom, , and A. Haim, "Super-resolution in pet imaging," *IEEE Transactions on Medical Imaging*, vol. 2, no. 137–147.

[3] S. Jian, C. Feng, L. J. Cheng, and L.Mian, ""a super-resolution reconstruction algorithm for surveillance video" in," *Journal of Forensic Science and Medicine*, vol. 3, no. 1, p. 26–30.

[4] A. Schmidt, "A modular neural network architecture with additional generalization abilities for high dimensional input vectors,."

CURRICULUM VITAE

images/vesikalik.jpg

Name Surname: Ali Veli

Place and Date of Birth: Izmir, 23/01/1996

E-Mail: itu@itu.com

EDUCATION:

- **B.Sc.:** 2019, Istanbul Technical University, Faculty of Electrical and Electronics Engineering, Electronics and Communication Engineering

PROFESSIONAL EXPERIENCE AND REWARDS:

- ASELSAN AŞ. *Jul 2018 - Aug 2018*